MAZDASPEED
PERFORMANCE ACCESSORIES
INSTALLATION INSTRUCTIONS

PART NUMBER: GRMS-8M-D17 | SPORT SPRING KIT | APPLICABLE MODELS: 2006< MX5 (all models)

CONTENTS OF KIT

1x Installation Instructions & Warranty Statement

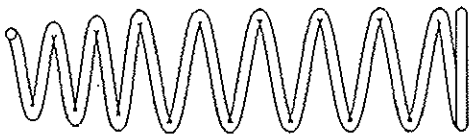

2x Rear springs (GRMS-8M-D17-R)

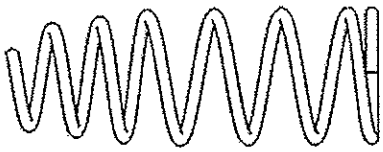

2x Front Springs (GRMS-8M-D17-F)

TOOLS REQUIRED

Sockets:		Alignment tools
10mm 14mm 17mm 21mm	Socket Driver Torque Wrench Spring compressor Sm Flat-head Screwdriver 12" socket extension & Swival Union	Spanner wrenches: 14mm 17mm 24mm

0 PRE INSTALLATION

- **WARNING!** Removal and installation of suspension components may be dangerous as parts may be under compression and are likely to "jump" unexpectedly, **causing serious injury or death**. Mazdaspeed Performance Accessory Suspension components should only be installed by a qualified licensed mechanic experienced in the installation and removal of suspension components.
- Mazdaspeed Accessories carry a different warranty than Mazda Genuine Accessories. Review the applicable warranty statement with your Mazdaspeed dealer. This product is sold under the Mazdaspeed Green Warranty Statement (See attached Warranty Statement Sheet).
- Warranties on tires and bushings will only be honored if there is proof that a vehicle alignment was performed at the time of installation by someone properly certified in performing vehicle alignments.
- Read complete instructions before starting installation of kit.
- Kit approved for North American vehicles only.
- For proper function, you must comply with the installation instructions.
- Use torque wrench on each bolt during installation. Torques are listed beside each fastener in exploded views, for reassembly in N-m(Kg-m,ft-lb)
- Provide instructions and OE take-off parts to the end user. Store instructions in a safe place for future use.

1a FRONT DAMPER/SPRING ASSMEBLY REMOVAL

CAUTION:

- Performing the following procedures without first removing the ABS wheel-speed sensor may possibly cause an open circuit in the harness if it is pulled by mistake. Before performing the following procedures, remove the ABS wheel-speed sensor (axle side) and fix it to an appropriate place where the sensor will not be pulled by mistake while servicing the vehicle. Also remove the brake hose bracket (1) attachment to the upper control arm.

1. With the front of the car off the ground and the suspension in full-droop, loosen lower attachment nut E and remove the upper control arm pivot bolts B and C.
2. Remove the stabilizer bar from the lower control arm.
3. Remove the 3 nuts that attach the upper mount to the shock tower (located under the hood).
4. Remove bolt D, push down on the damper assembly so the upper mount studs clear their attachment holes, and carefully pull outboard on damper and upper control arm until the damper/spring assembly slides up and out.

Figure A: Front Suspension Assembly

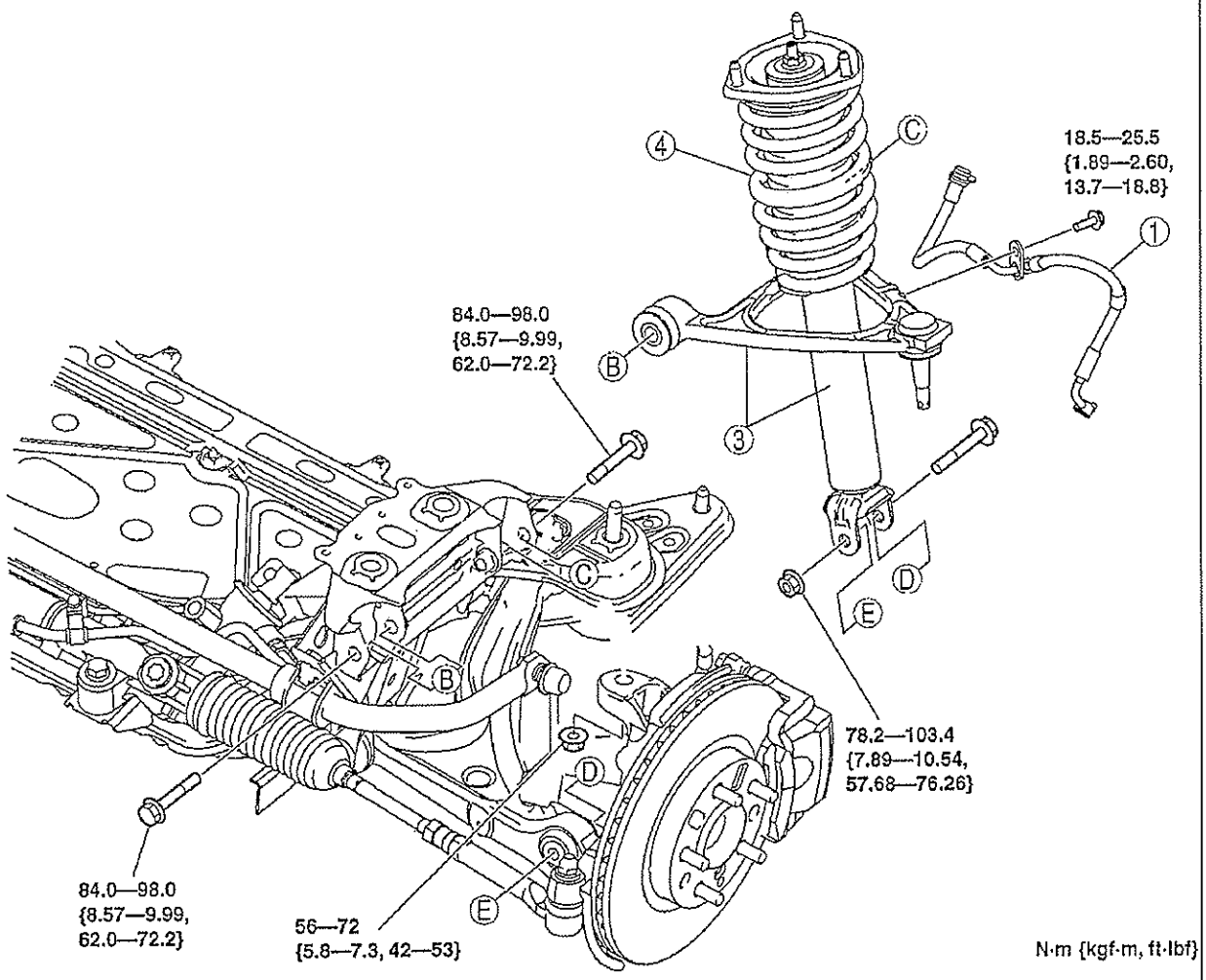

1b FRONT DAMPER/SPRING ASSMEBLY TEAR-DOWN

WARNING: If removed incorrectly the shock and spring could fly off under pressure, causing injury or death. Remove the piston rod nut carefully after spring is compressed and as follows. Secure the shock absorber in the spring compressor before removing the piston rod nut. Read spring compressor instructions before attempting to disassemble.

Note: Mark the alignment of the upper mount with the lower spring seat to insure it is re-assembled properly.

Figure B: Spring Compressor

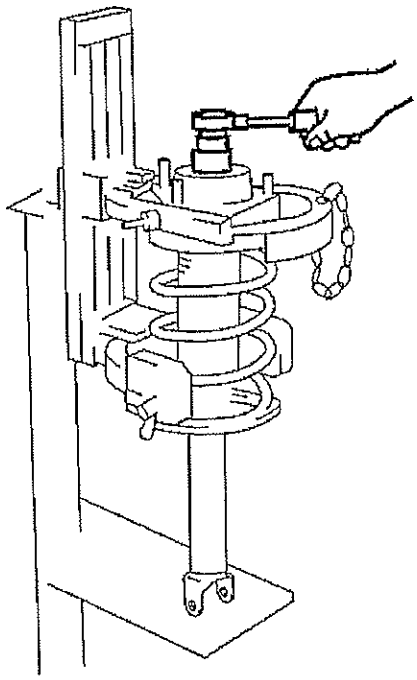

5. Install the spring/damper assembly into the spring compressor (recommended to use a piece of cloth in order to prevent the coil spring from being scratched).
6. Compress the coil spring using the spring compressor per its instructions and remove the piston rod nut.
7. Carefully remove upper mount and the shock absorber from the spring. Make sure not to loose pieces of the assembly.
8. Carefully de-compress the spring per the spring compressor instructions.
9. Using the alignment marks, assemble GRMS-8M-D17-F into the assembly per the Figure below and tighten the upper nut to specified torque (38.1-46.1 N-m).

Figure C: Front MX5 Strut Assembly

(1) Upper Nut
(2) Upper Washer
(3) Upper Damper Isolator
(4) Upper Mount
(5) Spring Cushion / Dust Boot
(6) Spacer-Isolator
(7) Lower Isolator
(8) Bump Stop Assembly
(9) Bump Stop
(10) Lower Washer
(11) Front Spring
(12) Front Damper

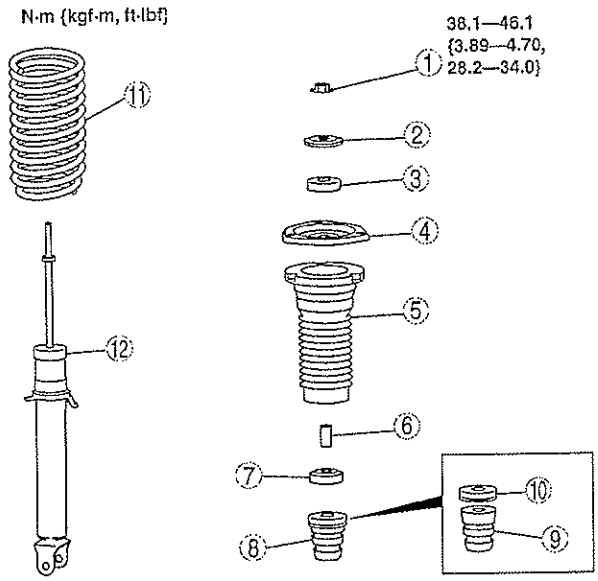

1c FRONT DAMPER/SPRING INSTALLATION

10. Re-assemble in reverse order, but do not torque bolts B or nut E until the vehicle is on the ground. Failing to do so could result in pre-mature failure of the rubber bushings, and will force the vehicle to sit higher. All torques, with the exceptions to the ones below, are shown in Figure A.

Torque for Stabilizer bar nut is 43.1-60.8 N-m

Torque for front-upper mount-to-tower nuts is 29.4-39.8 N-m

2a REAR DAMPER/SPRING REMOVAL

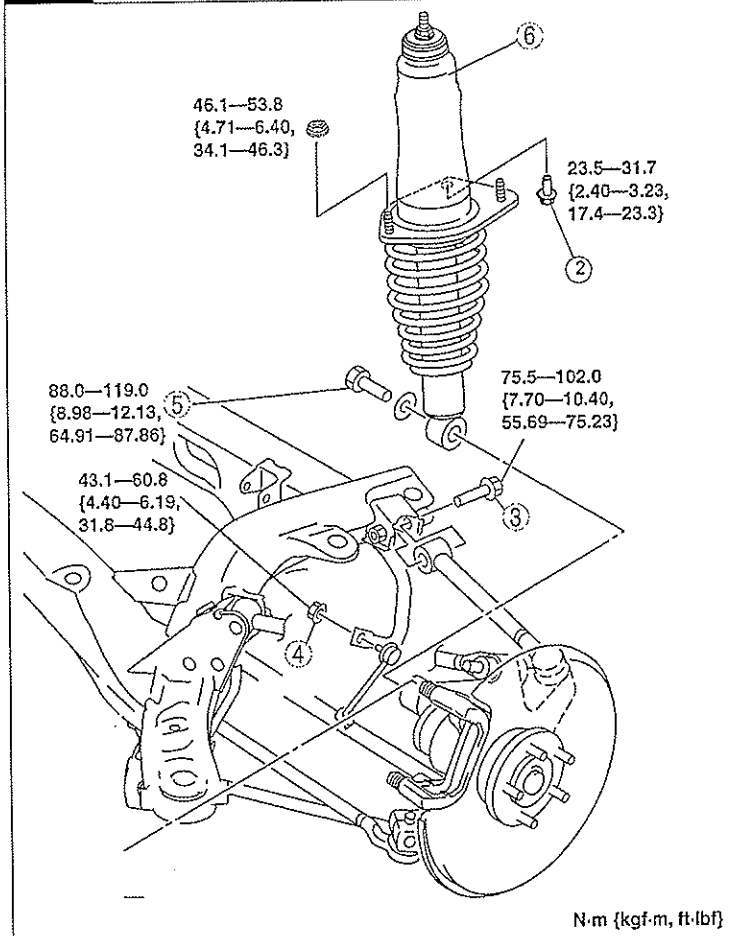

Figure D: Rear Suspension Assembly

1. Remove the trunk liner from the inside of the trunk, carefully, using a small flat-head screw driver or clip-removal tool.
2. Remove the fuel-filler shield from the left side of the trunk, then remove the two nuts that hold the mount (6) on each side.
3. With the rear of the vehicle raised and the suspension in full-droop, remove bolts 2, 3, and 4 and detach sway bar bracket.
4. With bolt 3 removed, rotate the rear link out of the way, pull down on the hub and pull the damper off the lower mount.
5. Whiles pulling down on the hub, maneuver the damper/spring assembly down and clear of the suspension.

2b REAR STRUT TEAR-DOWN & BUILD-UP

WARNING: If removed incorrectly the shock and spring could fly off under pressure, causing injury or death. Remove the piston rod nut carefully after spring is compressed and as follows. Secure the shock absorber in the spring compressor before removing the piston rod nut. Read spring compressor instructions before attempting to disassemble.

Note: Mark the alignment of the upper mount with the lower spring seat to insure it is re-assembled properly.

10. Install the damper/spring assembly into the spring compressor (recommended to use a piece of cloth in order to prevent the coil spring from being scratched)-(See Figure B).
11. Compress the coil spring using the spring compressor per its instructions and remove the piston rod nut.
12. Carefully remove upper mount and the shock absorber from the spring. Make sure not to loose pieces of the assembly.
13. Carefully de-compress the spring per the spring compressor instructions.
14. Using the alignment marks, assemble GRMS-8M-D17-R into the assembly per the Figure below and tighten the upper nut to specified torque (38.1-46.1 N-m).

Figure E: Rear MX5 Strut Assembly

(1) Upper Nut
(2) Upper Washer
(3) Upper Damper Isolator
(4) Upper Mount
(5) Spring Cushion / Dust Boot
(6) Spacer-Isolator
(7) Lower Isolator
(8) Bump Stop Assembly
(9) Bump Stop
(10) Spacer-Bump Stop
(11) Lower Washer
(12) Rear Spring
(13) Rear Damper

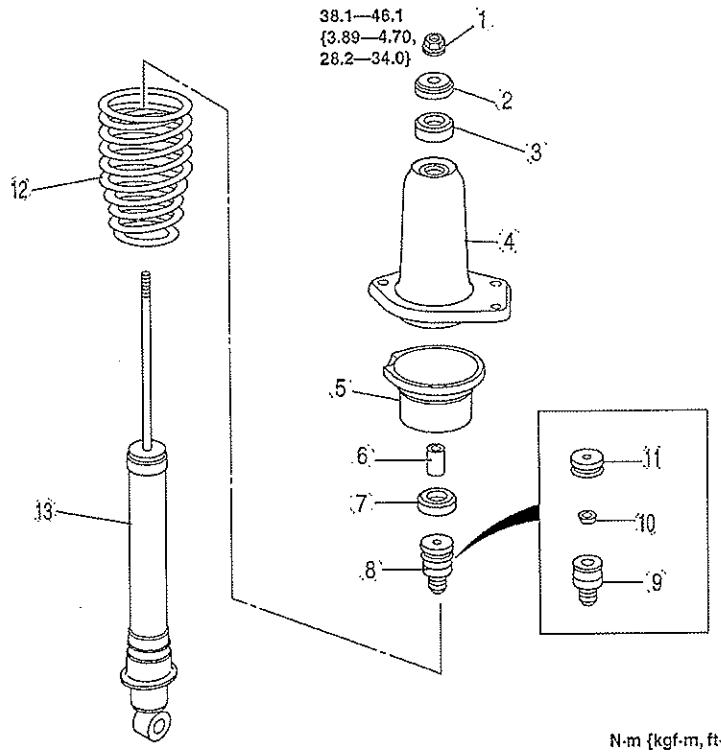

2c REAR DAMPER/SPRING INSTALLATION

11. Re-assemble in reverse order, but do not torque bolts 3 or 5 until the vehicle is on the ground. Failing to do so could result in pre-mature failure of the rubber bushings, and will force the vehicle to sit higher. All torques, with the exceptions to the ones below, are shown in Figure A.

(Torque for Stabilizer bar nut is 43.1-60.8 N-m)

3 FINAL INSTALLATION NOTES

- It is common for some vehicle suspensions to settle about 5mm over the first 3000 miles of driving.
- A vehicle alignment should be performed after assembly. Specifications should be set to recommended specifications (below).
- All components that are controlled by vehicle ride height (headlights, etc.) must be adjusted as specified by the vehicle manufacturer instructions and procedures.

SUSPENSION ALIGNMENT SPECIFICATIONS

FRONT

Item			Specification
Total toe-in	Tire [Tolerance ±4 mm {0.15 in}]	(mm {in})	2 {0.08}
	Rim inner	(mm {in})	1.4±2.2 {0.06±0.08}
		degree	0°11′±22′
Steering angle [Tolerance ±3°]		Inner	38°42′
		Outer	32°54′
Steering axis inclination (Reference value)			10°43′
Camber [Tolerance ±0.5°]	Vehicle height: From the end of the front fender to the center of the wheel (mm) - recommend measuring from the bottom of the rim to a marked point on the fender, then subtracting ½ of the rim diameter.	356—365	-0°41′
		346—355	-1°01′
		336—345	-1°20′
		326—335	-1°38′
		315—325	-1°57′
Caster [Tolerance ±0.5°]	Vehicle height: From the end of the front fender to the center of the wheel (mm) - recommend measuring from the bottom of the rim to a marked point on the fender, then subtracting ½ of the rim diameter.	356—365	6°27′
		346—355	6°36′
		336—345	6°44′
		326—335	6°52′
		315—325	6°57′

REAR

Item			Specification
Total toe-in	Tire [Tolerance ±4 mm {0.15 in}]	(mm {in})	3 {0.12}
	Rim inner	(mm {in})	2.2±2.2 {0.083±0.08}
		degree	0°17′±22′

Camber [Tolerance ±0.5°]	Vehicle height: From the end of the front fender to the center of the wheel (mm) - recommend measuring from the bottom of the rim to a marked point on the fender, then subtracting ½ of the rim diameter.	356—365	-1°38′
		346—355	-1°56′
		336—345	-2°14′
		326—335	-2°30′
		315—325	-2°45′